Recommended Interface Diagram for Optical Receiver Module

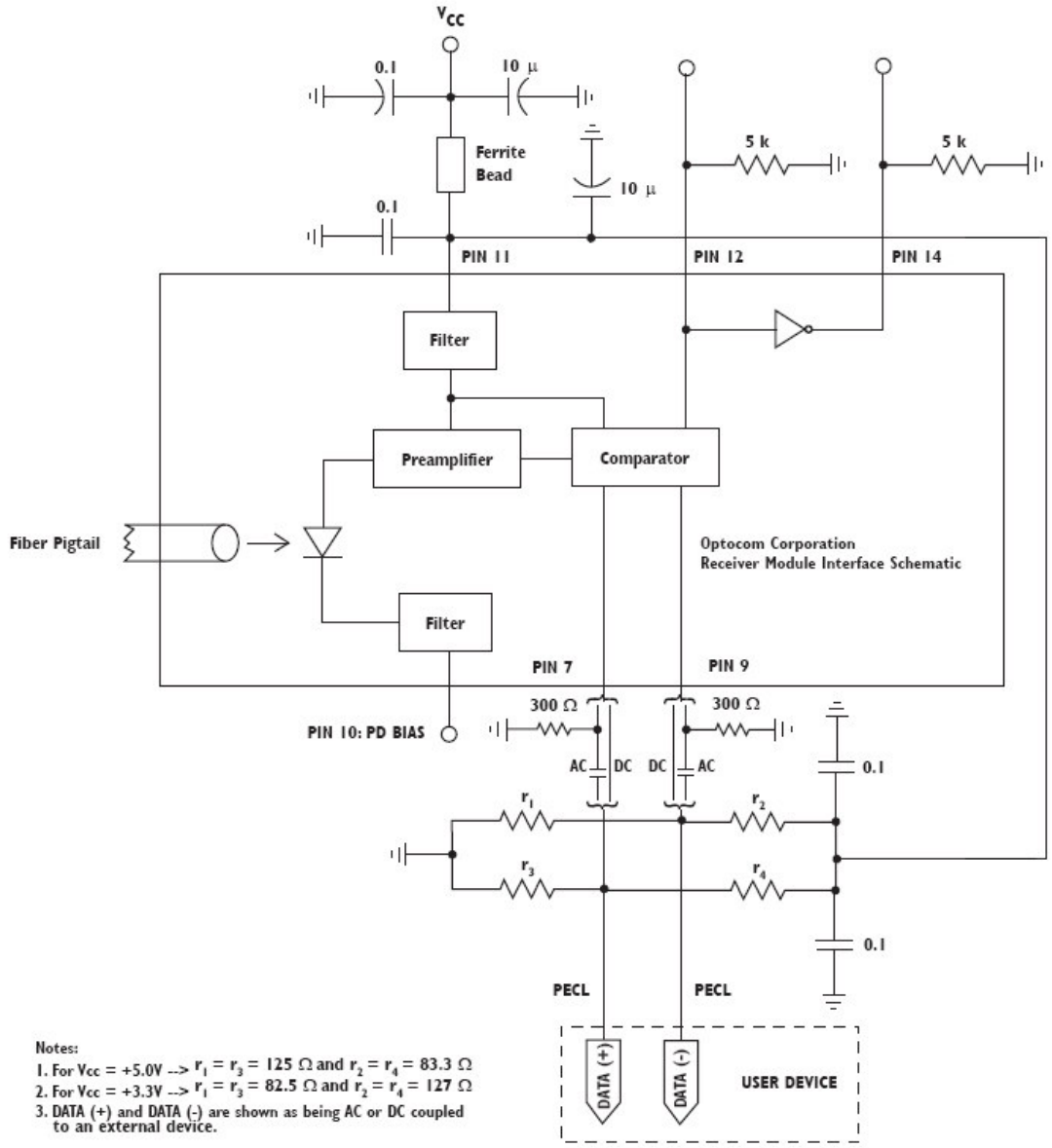

© Optocom Corporation. All rights reserved.

210 Andover Street, No. 26
Wilmington, MA 01887

Tel: (978) 988-8711
Fax: (978) 988-8722
www.optocom.com